Masse/Dimensions in mm

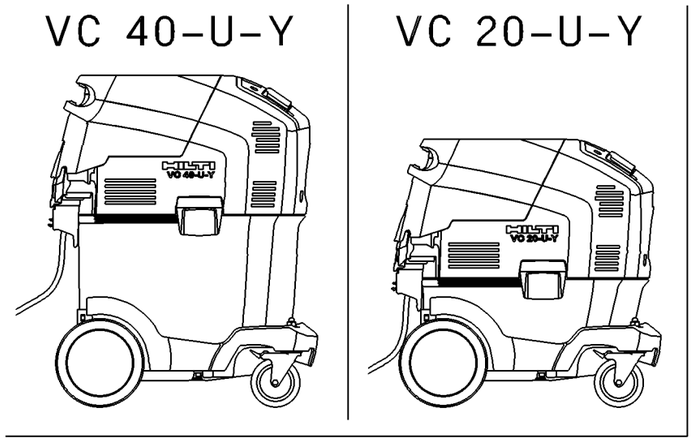

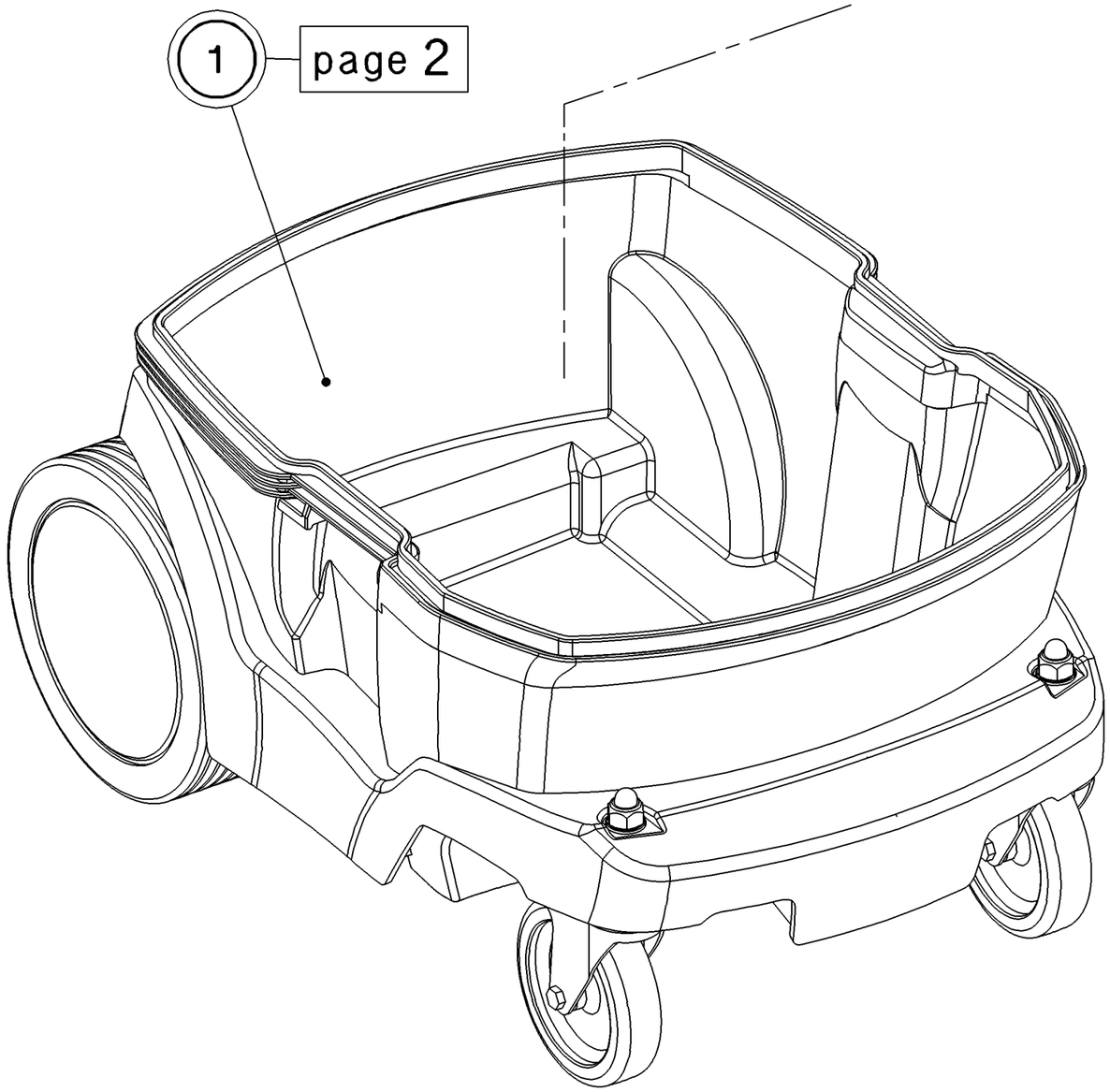

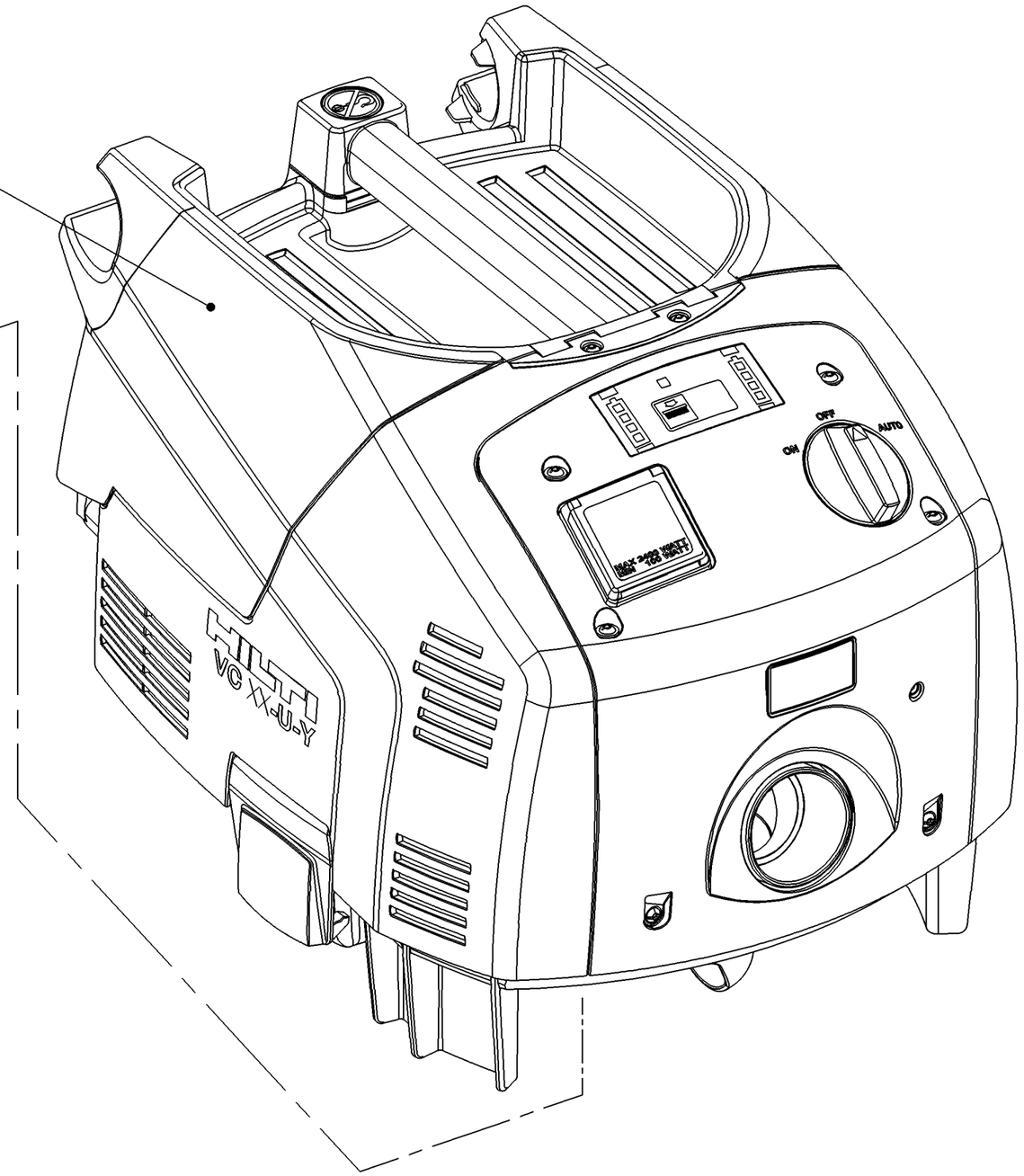

only valid in relation with current engineering BOM

Scale	Format	ISO "E"	Approval requirement	Critical feature	Name	Sheet
-	A3		ABE	Major feature	SD VC 20-U-Y / VC 40-U-Y	1 of 15
					SZ VC 20-U-Y / VC 40-U-Y	

Status	09.06.2016	Released	
Drawn	08.06.2016	GERNRAP	
Modified	08.06.2016	GERNRAP	Document No. 5112992 / E / 609343
Checked			Material No. 2046727

Hilti = registered trademark of Hilti Corporation, Schaan, LI

Copyright reserved

Print Date: 10.06.2016 09:59:07 | Printed by: Raphael Gerner | Document-Nr: USD / 5112992 / 001 / 05 | ECM: 000000609343 | Comment:

Masse/Dimensions in mm

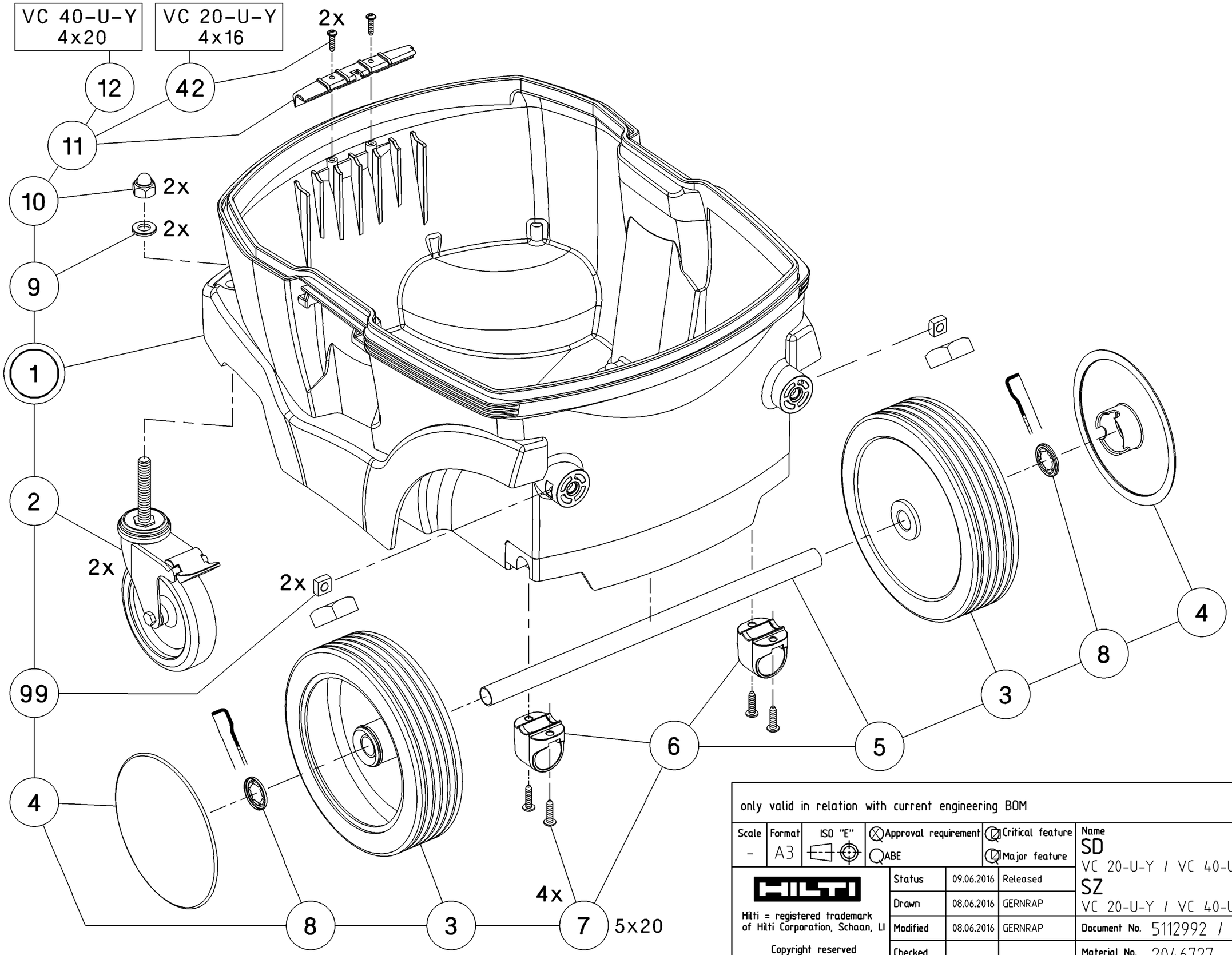

only valid in relation with current engineering BOM

Scale	Format	ISO "E"	Approval requirement	Critical feature	Name	Sheet
-	A3		ABE	Major feature	SD VC 20-U-Y / VC 40-U-Y SZ VC 20-U-Y / VC 40-U-Y	2 of 15

Status	09.06.2016	Released
Drawn	08.06.2016	GERNRAP
Modified	08.06.2016	GERNRAP
Checked		

Document No. 5112992 / E / 609343

Material No. 2046727

Hilti = registered trademark of Hilti Corporation, Schaan, LI

Copyright reserved

Print Date: 10.06.2016 09:59:08 | Printed by: Raphael Gerner | Document-Nr: USD / 5112992 / 002 / 05 | ECM: 000000609343 | Comment:

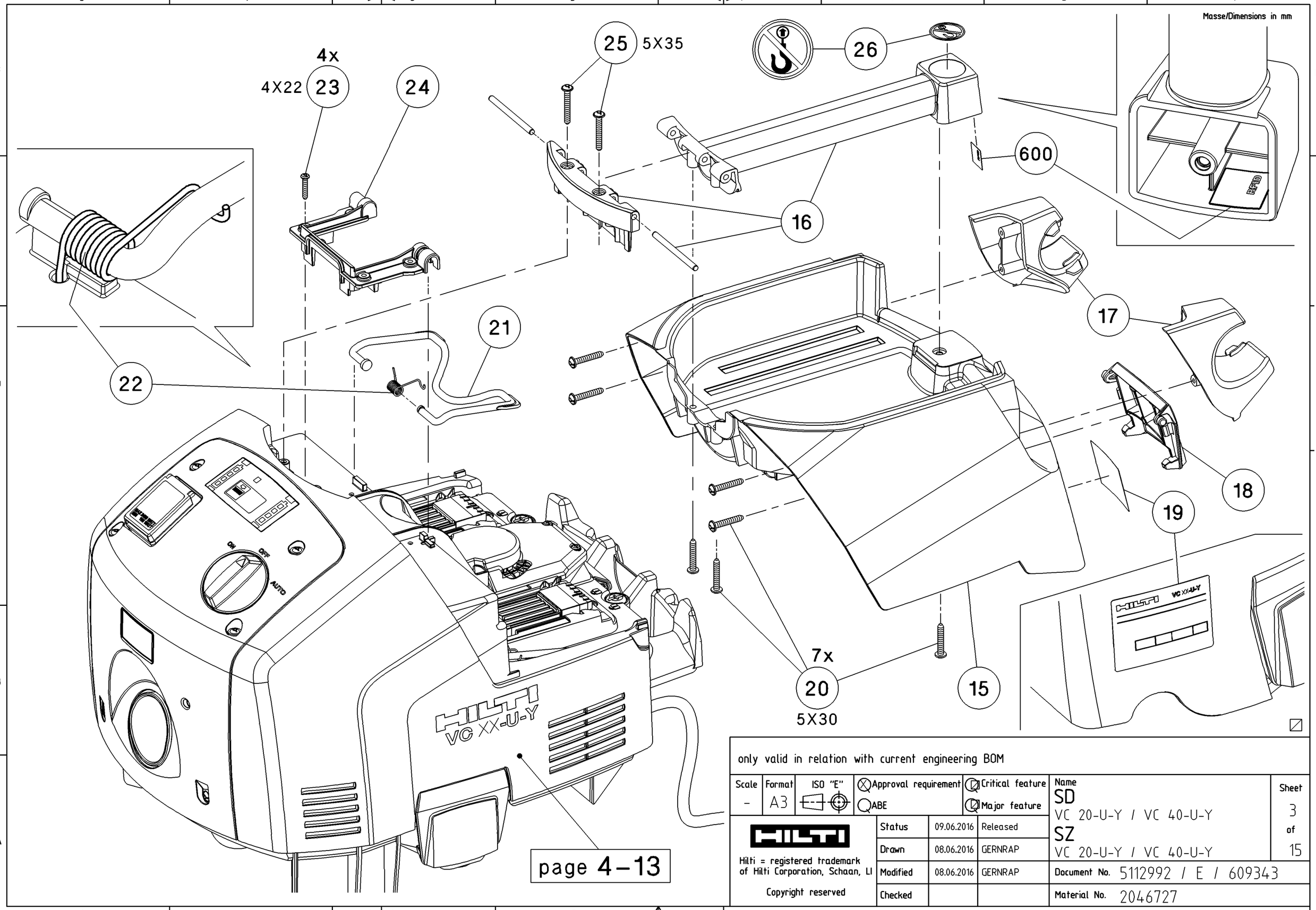

only valid in relation with current engineering BOM

Scale	Format	ISO "E"	Approval requirement	Critical feature	Name	Sheet
-	A3		ABE	Major feature	SD VC 20-U-Y / VC 40-U-Y	3 of 15
					SZ VC 20-U-Y / VC 40-U-Y	

Status	09.06.2016	Released	
Drawn	08.06.2016	GERNRAP	
Modified	08.06.2016	GERNRAP	Document No. 5112992 / E / 609343
Checked			Material No. 2046727

Hilti = registered trademark of Hilti Corporation, Schaan, LI

Copyright reserved

Print Date: 10.06.2016 09:59:09 | Printed by: Raphael Gerner | Document-Nr: USD / 5112992 / 003 / 05 | ECM: 000000609343 | Comment:

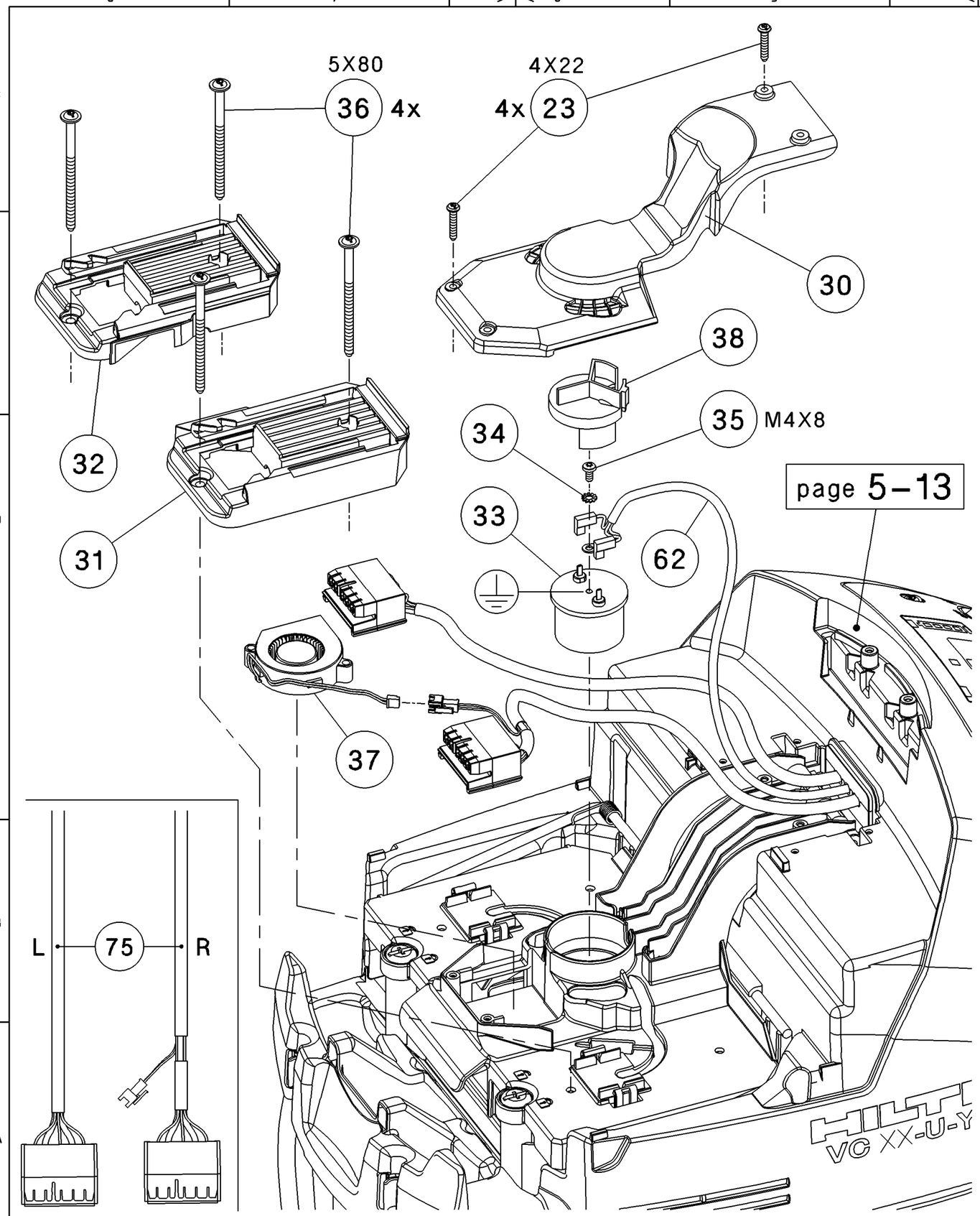

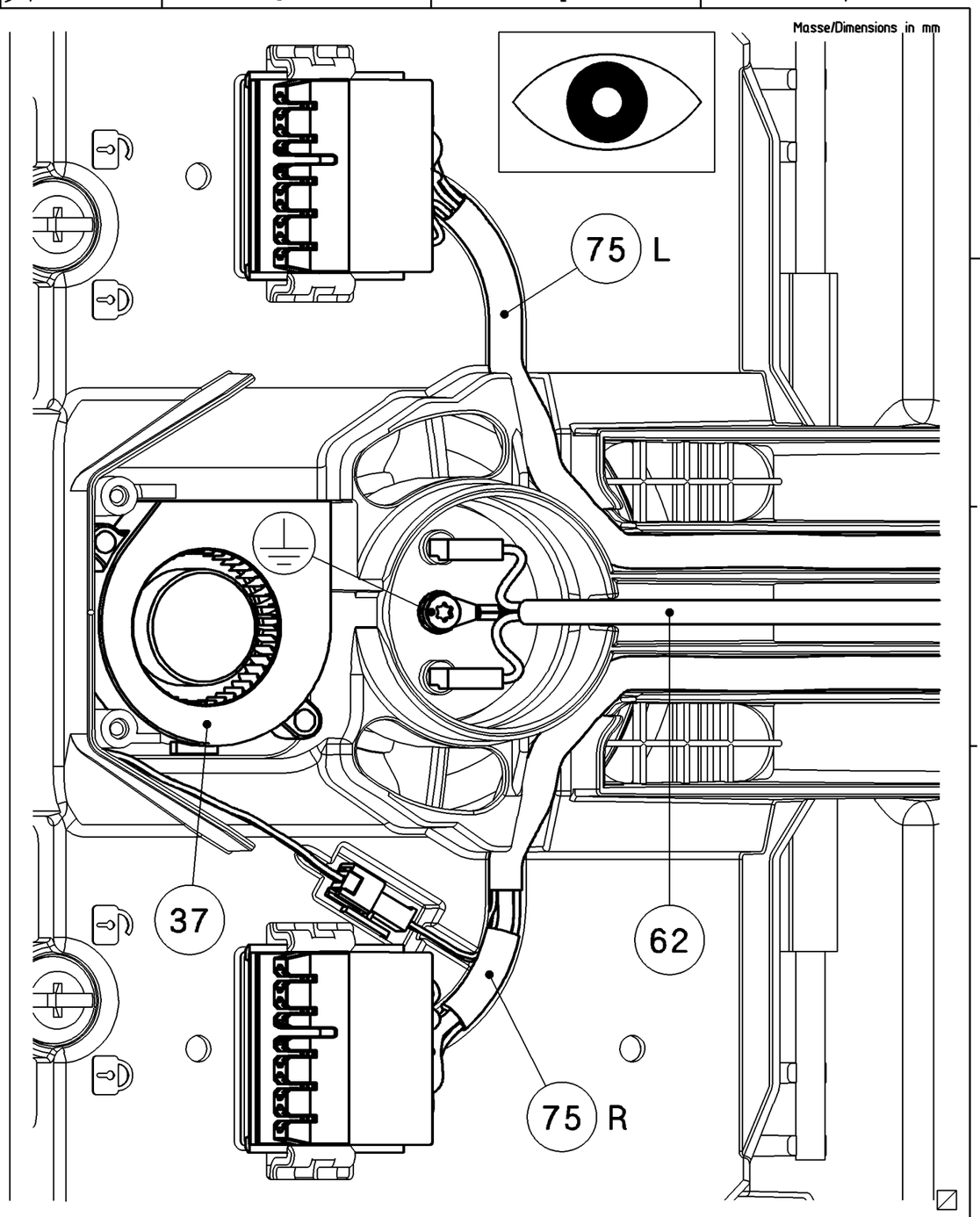

only valid in relation with current engineering BOM

Scale	Format	ISO "E"	Approval requirement	Critical feature	Name	Sheet
-	A3		ABE	Major feature	SD VC 20-U-Y / VC 40-U-Y	4 of 15
					SZ VC 20-U-Y / VC 40-U-Y	

Status	09.06.2016	Released
Drawn	08.06.2016	GERNRAP
Modified	08.06.2016	GERNRAP
Checked		

Document No. 5112992 / E / 609343

Material No. 2046727

Hilti = registered trademark of Hilti Corporation, Schaan, LI

Copyright reserved

Print Date: 10.06.2016 09:59:10 | Printed by: Raphael Gerner | Document-Nr: USD / 5112992 / 004 / 05 | ECM: 000000609343 | Comment:

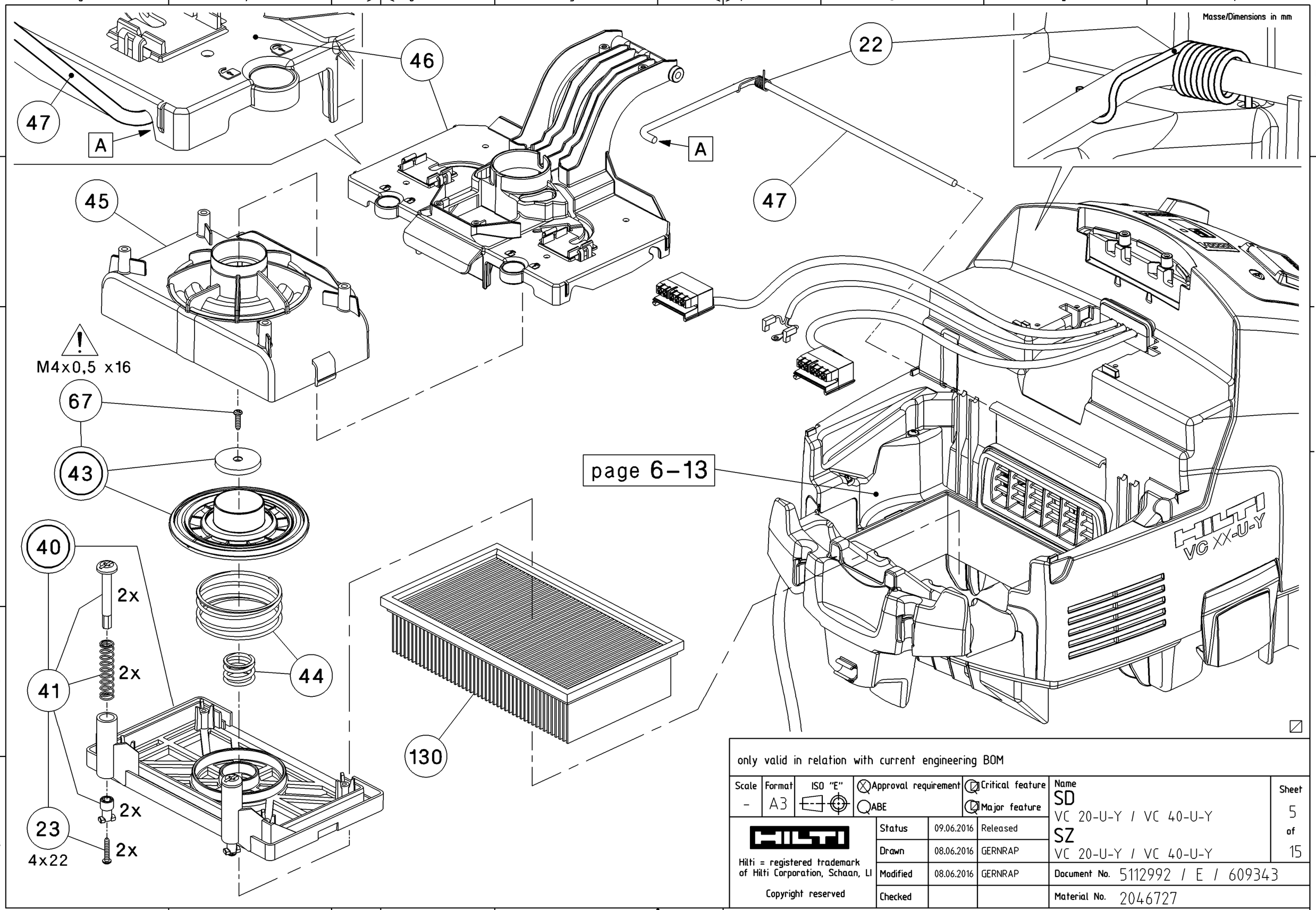

only valid in relation with current engineering BOM

Scale	Format	ISO "E"	Approval requirement	Critical feature	Name	Sheet
-	A3		ABE	Major feature	SD VC 20-U-Y / VC 40-U-Y	5 of 15
					SZ VC 20-U-Y / VC 40-U-Y	

Status	09.06.2016	Released	
Drawn	08.06.2016	GERNRAP	
Modified	08.06.2016	GERNRAP	Document No. 5112992 / E / 609343
Checked			Material No. 2046727

Hilti = registered trademark of Hilti Corporation, Schaan, LI

Copyright reserved

Print Date: 10.06.2016 09:59:10 | Printed by: Raphael Gerner | Document-Nr: USD / 5112992 / 005 / 05 | ECM: 000000609343 | Comment:

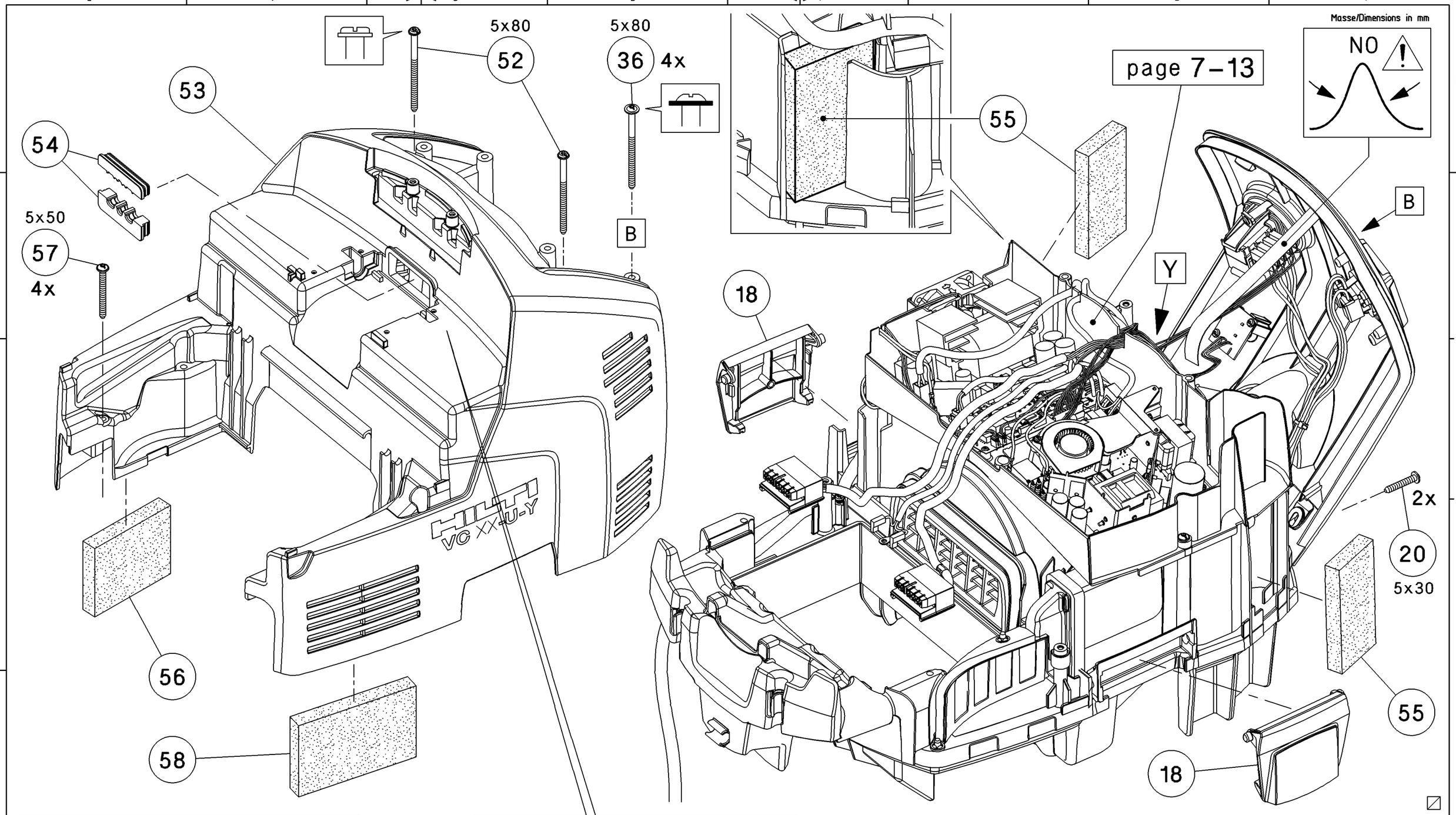

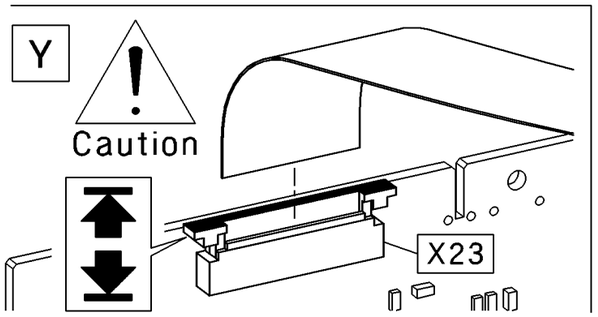

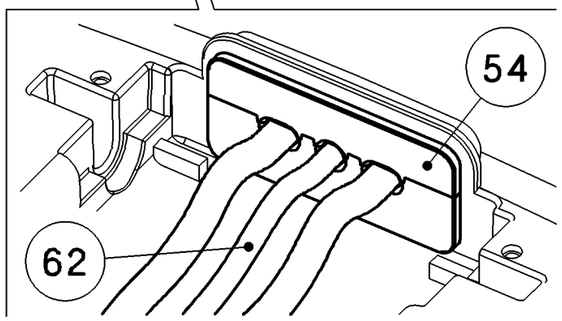

only valid in relation with current engineering BOM

Scale	Format	ISO "E"	Approval requirement	Critical feature	Name	Sheet
-	A3		ABE	Major feature	SD VC 20-U-Y / VC 40-U-Y SZ VC 20-U-Y / VC 40-U-Y	6 of 15

Status	09.06.2016	Released	
Drawn	08.06.2016	GERNRAP	
Modified	08.06.2016	GERNRAP	
Checked			

Document No. 5112992 / E / 609343

Material No. 2046727

Hilti = registered trademark of Hilti Corporation, Schaan, LI

Copyright reserved

Print Date: 10.06.2016 09:59:11 | Printed by: Raphael Gerner | Document-Nr: USD / 5112992 / 006 / 05 | ECM: 000000609343 | Comment:

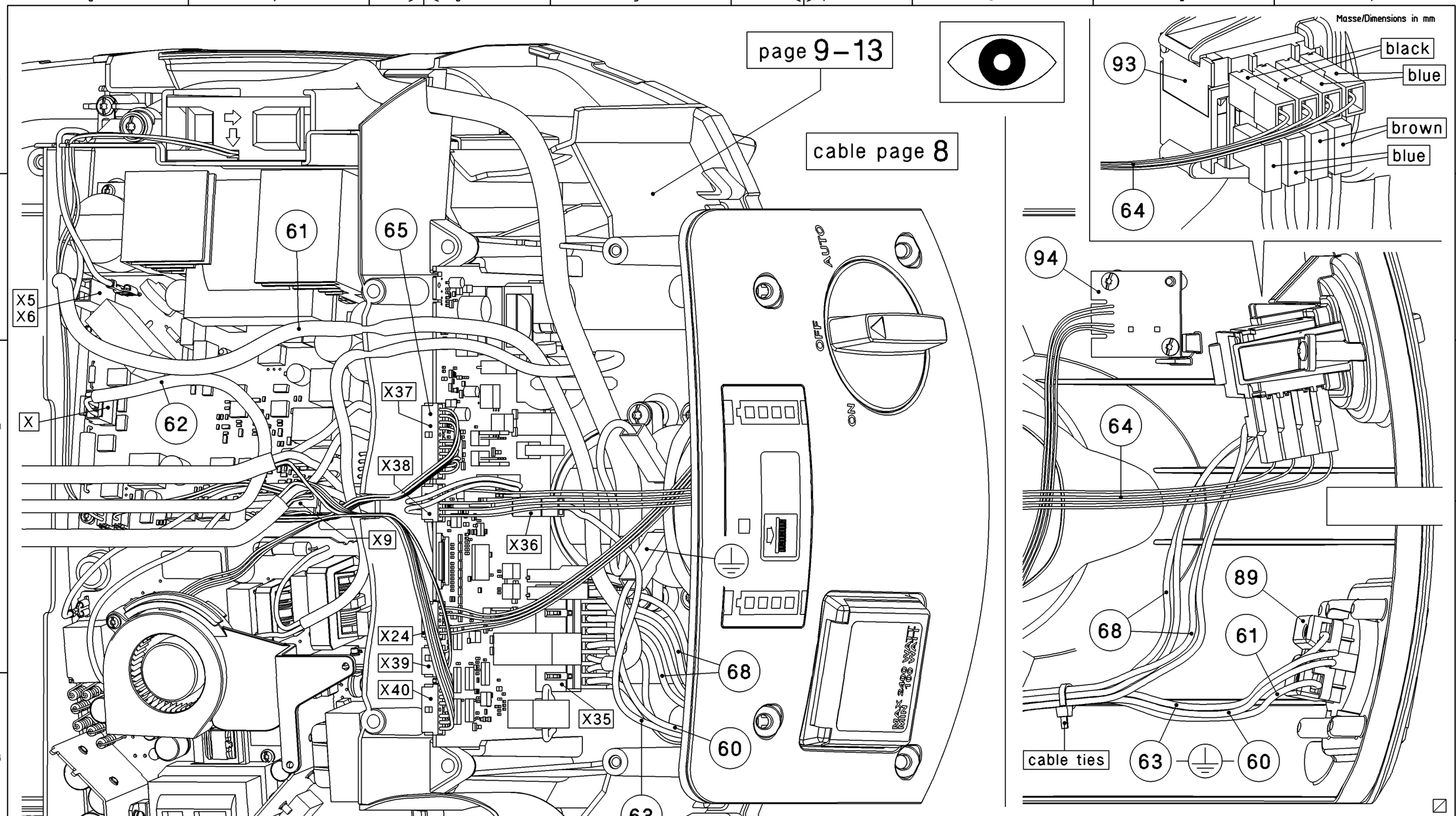

only valid in relation with current engineering BOM

Scale	Format	ISO "E"	Approval requirement	Critical feature	Name	Sheet
-	A3		ABE	Major feature	SD VC 20-U-Y / VC 40-U-Y	7 of 15
					SZ VC 20-U-Y / VC 40-U-Y	

Status	09.06.2016	Released	
Drawn	08.06.2016	GERNRAP	
Modified	08.06.2016	GERNRAP	Document No. 5112992 / E / 609343
Checked			Material No. 2046727

Hilti = registered trademark of Hilti Corporation, Schaan, LI

Copyright reserved

Print Date: 10.06.2016 09:59:15 | Printed by: Raphael Gerner | Document-Nr: USD / 5112992 / 007 / 05 | ECM: 000000609343 | Comment:

Masse/Dimensions in mm

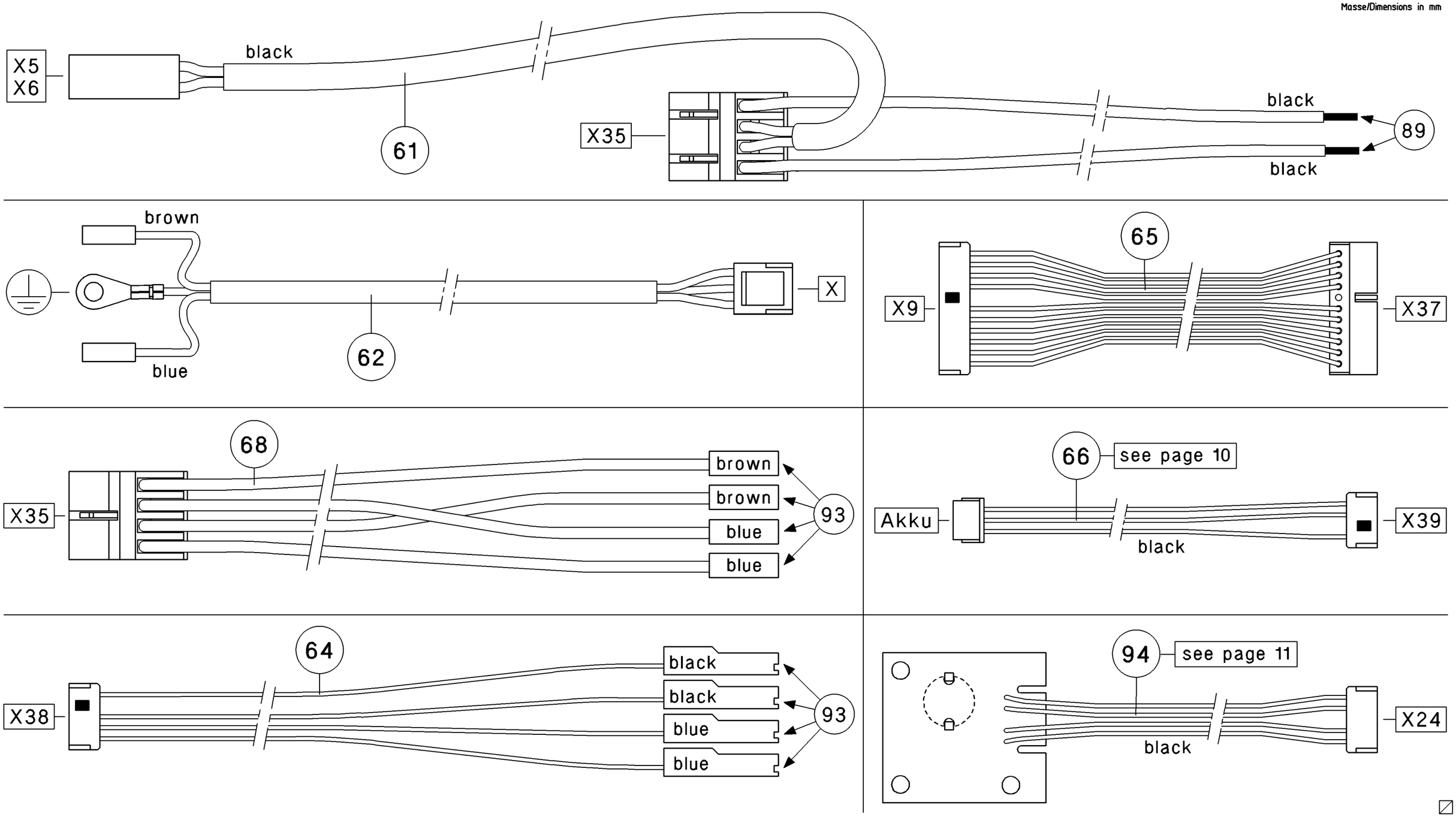

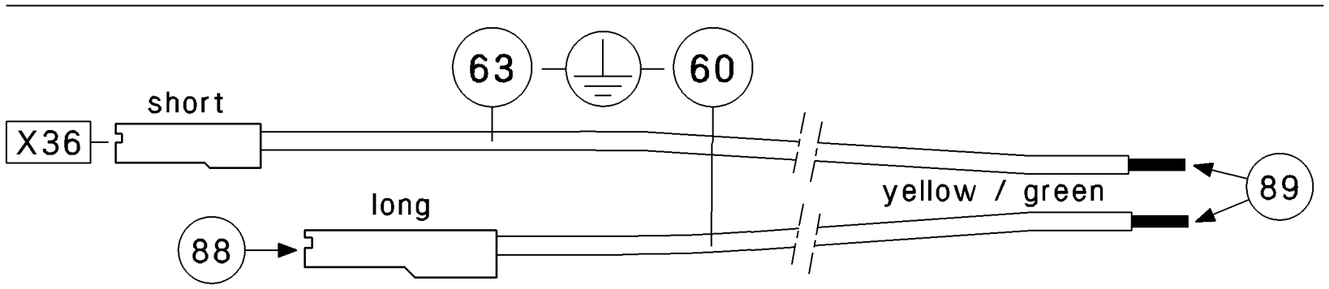

only valid in relation with current engineering BOM

Scale	Format	ISO "E"	Approval requirement	Critical feature
-	A3		ABE	Major feature

Status	09.06.2016	Released	
Drawn	08.06.2016	GERNRAP	
Modified	08.06.2016	GERNRAP	
Checked			

Hilti = registered trademark of Hilti Corporation, Schaan, LI

Copyright reserved

Name
SD
VC 20-U-Y / VC 40-U-Y
SZ
VC 20-U-Y / VC 40-U-Y

Sheet 8 of 15

Document No. 5112992 / E / 609343

Material No. 2046727

Print Date: 10.06.2016 09:59:16 | Printed by: Raphael Gerner | Document-Nr: USD / 5112992 / 008 / 05 | ECM: 000000609343 | Comment:

Masse/Dimensions in mm

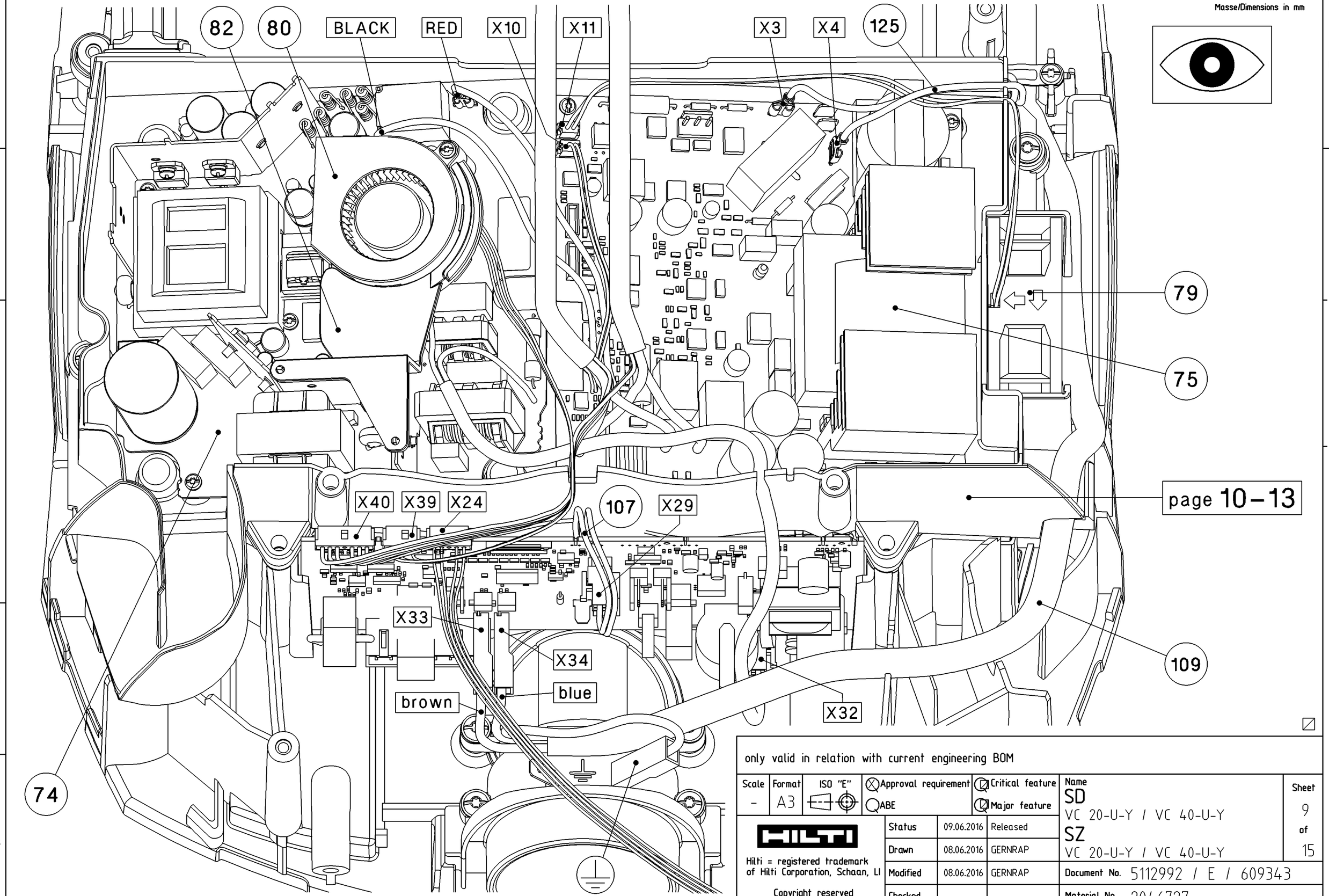

only valid in relation with current engineering BOM

Scale	Format	ISO "E"	Approval requirement	Critical feature
-	A3		ABE	Major feature

HILTI

Hilti = registered trademark of Hilti Corporation, Schaan, LI

Copyright reserved

Status	09.06.2016	Released
Drawn	08.06.2016	GERNRAP
Modified	08.06.2016	GERNRAP
Checked		

Name
SD
VC 20-U-Y / VC 40-U-Y
SZ
VC 20-U-Y / VC 40-U-Y

Sheet 9 of 15

Document No. 5112992 / E / 609343

Material No. 2046727

Print Date: 10.06.2016 09:59:17 | Printed by: Raphael Gerner | Document-Nr: USD / 5112992 / 009 / 05 | ECM: 000000609343 | Comment:

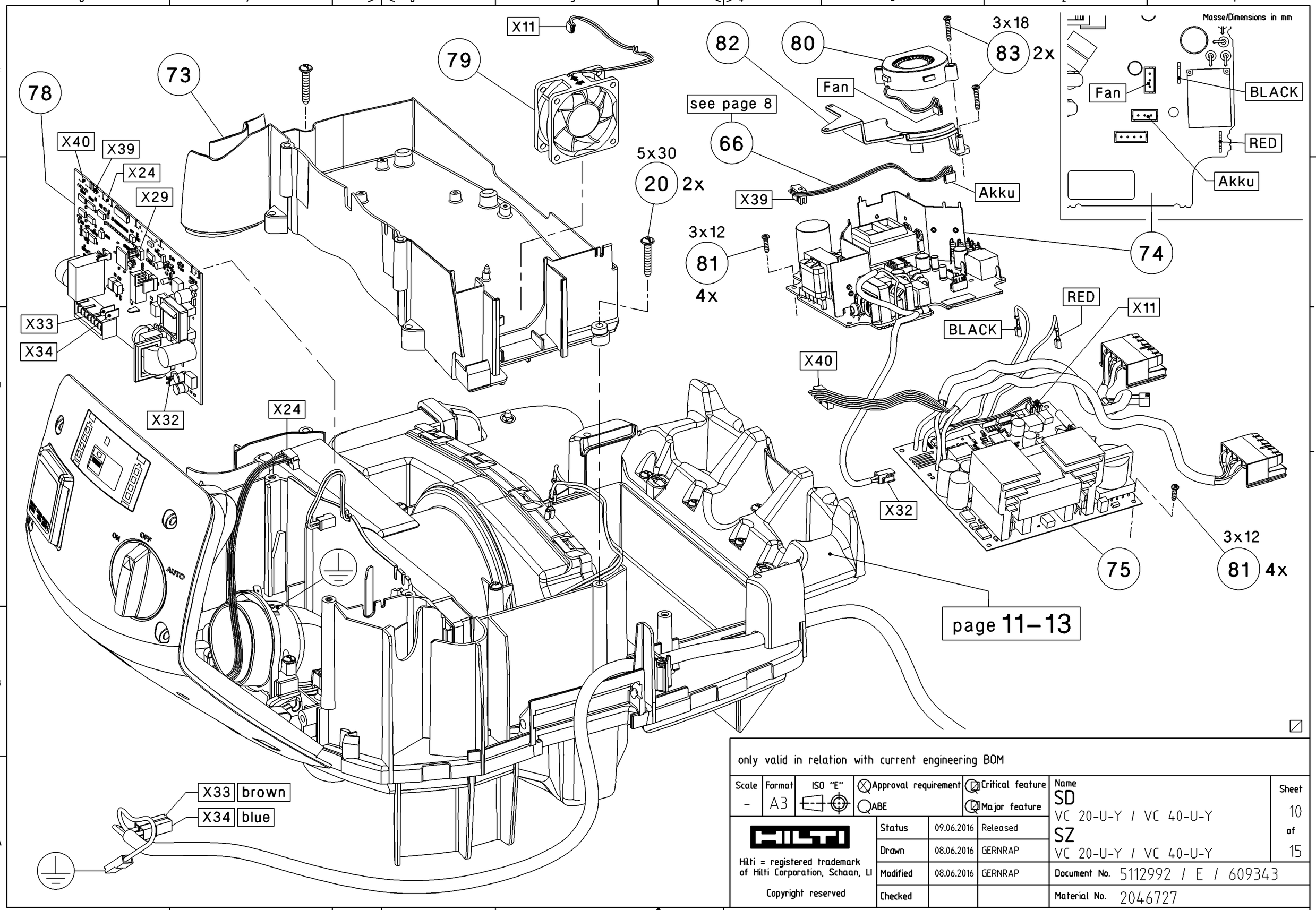

only valid in relation with current engineering BOM

Scale	Format	ISO "E"	Approval requirement	Critical feature	Name	Sheet
-	A3		ABE	Major feature	SD VC 20-U-Y / VC 40-U-Y	10 of 15
					SZ VC 20-U-Y / VC 40-U-Y	

Status	09.06.2016	Released	
Drawn	08.06.2016	GERNRAP	
Modified	08.06.2016	GERNRAP	
Checked			

Document No. 5112992 / E / 609343

Material No. 2046727

Hilti = registered trademark of Hilti Corporation, Schaan, LI

Copyright reserved

Print Date: 10.06.2016 09:59:17 | Printed by: Raphael Gerner | Document-Nr: USD / 5112992 / 010 / 05 | ECM: 000000609343 | Comment:

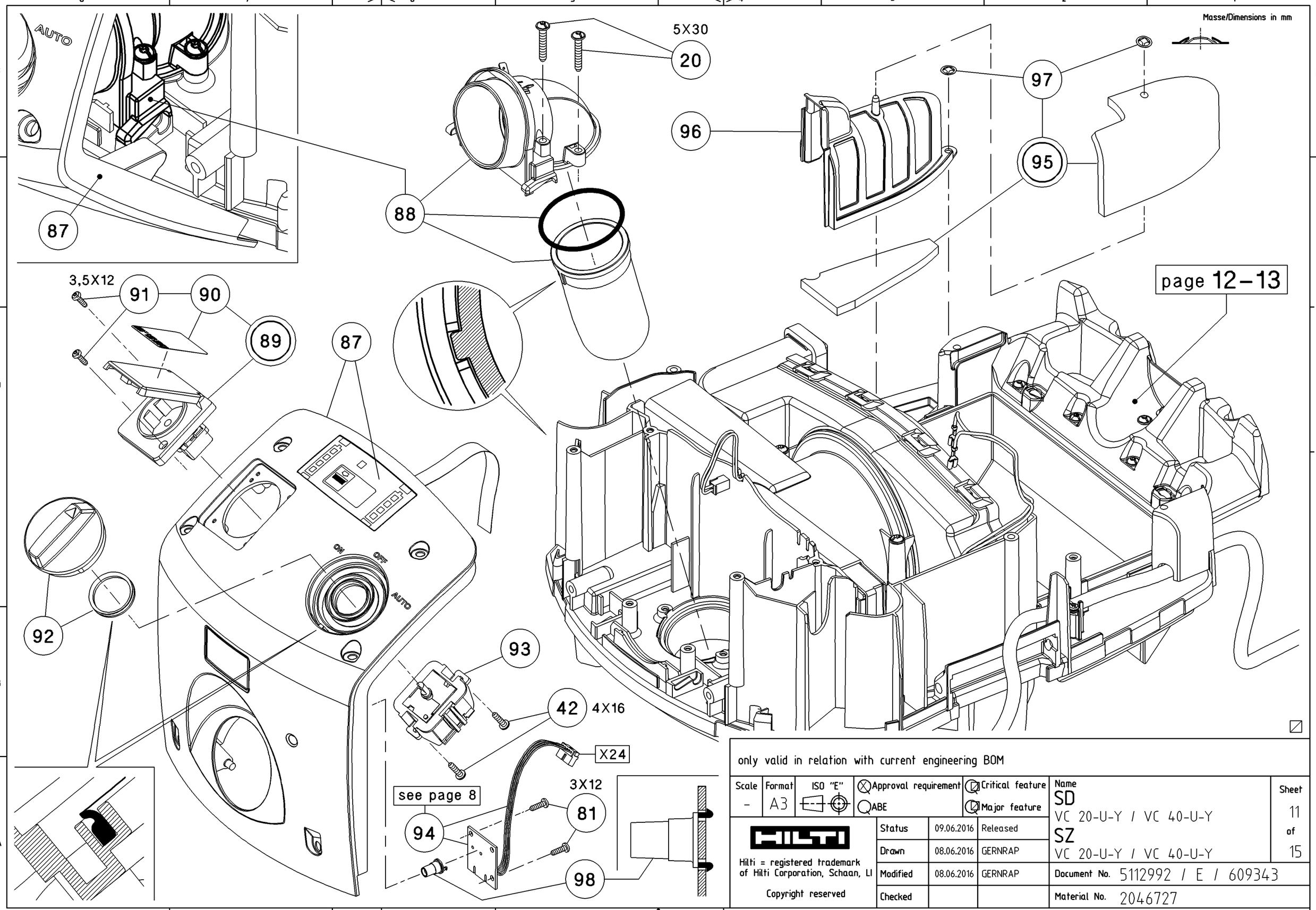

only valid in relation with current engineering BOM

Scale	Format	ISO "E"	Approval requirement	Critical feature	Name	Sheet
-	A3		ABE	Major feature	SD VC 20-U-Y / VC 40-U-Y SZ VC 20-U-Y / VC 40-U-Y	11 of 15

Status	09.06.2016	Released
Drawn	08.06.2016	GERNRAP
Modified	08.06.2016	GERNRAP
Checked		

Document No. 5112992 / E / 609343

Material No. 2046727

Hilti = registered trademark of Hilti Corporation, Schaan, LI

Copyright reserved

Print Date: 10.06.2016 09:59:18 | Printed by: Raphael Gerner | Document-Nr: USD / 5112992 / 011 / 05 | ECM: 000000609343 | Comment:

Masse/Dimensions in mm

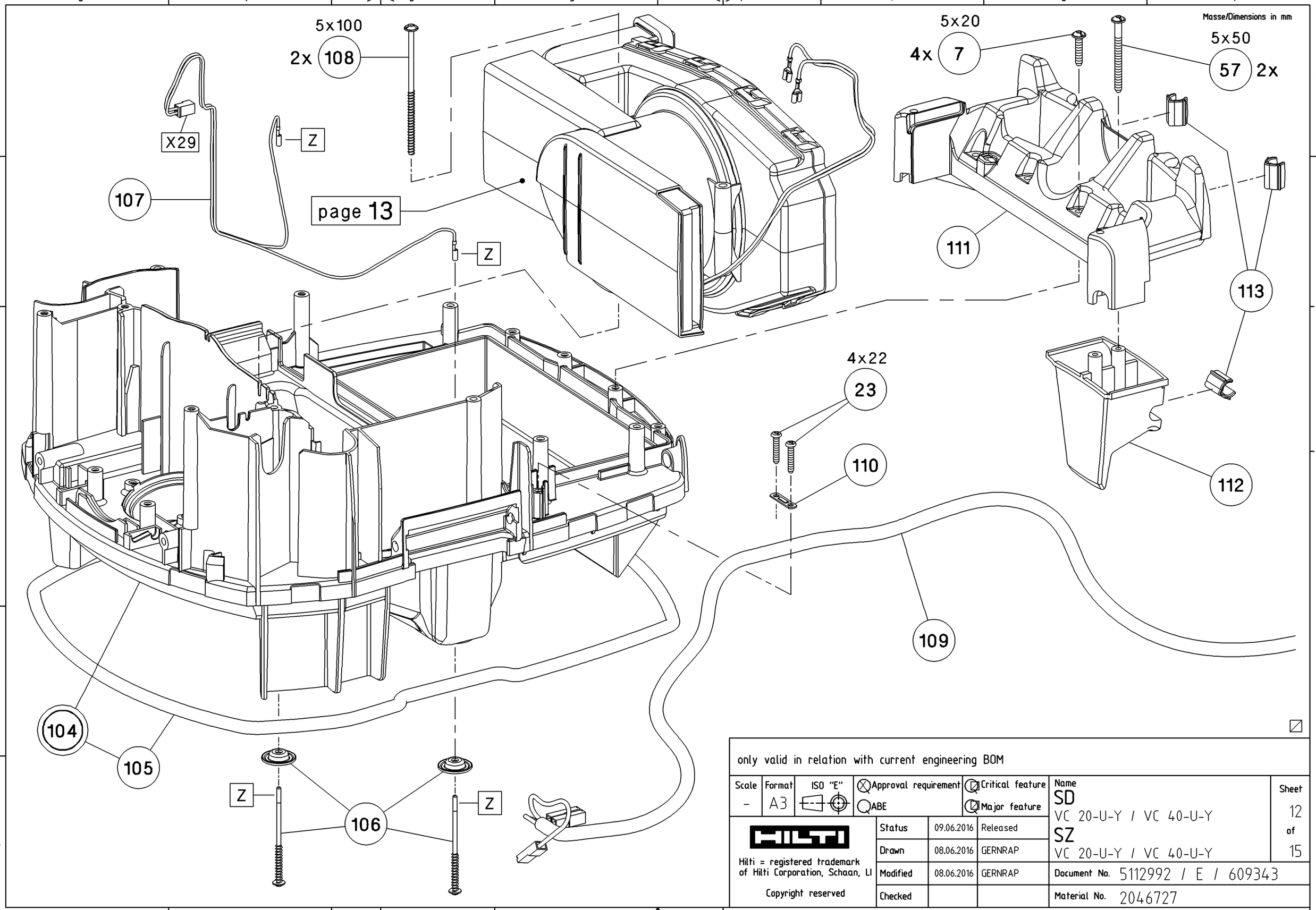

only valid in relation with current engineering BOM

Scale	Format	ISO "E"	Approval requirement	Critical feature	Name	Sheet
-	A3		ABE	Major feature	SD VC 20-U-Y / VC 40-U-Y SZ VC 20-U-Y / VC 40-U-Y	12 of 15

Status	09.06.2016	Released
Drawn	08.06.2016	GERNRAP
Modified	08.06.2016	GERNRAP
Checked		

Document No. 5112992 / E / 609343

Material No. 2046727

Hilti = registered trademark of Hilti Corporation, Schaan, LI

Copyright reserved

Print Date: 10.06.2016 09:59:19 | Printed by: Raphael Gerner | Document-Nr: USD / 5112992 / 012 / 05 | ECM: 000000609343 | Comment:

Masse/Dimensions in mm

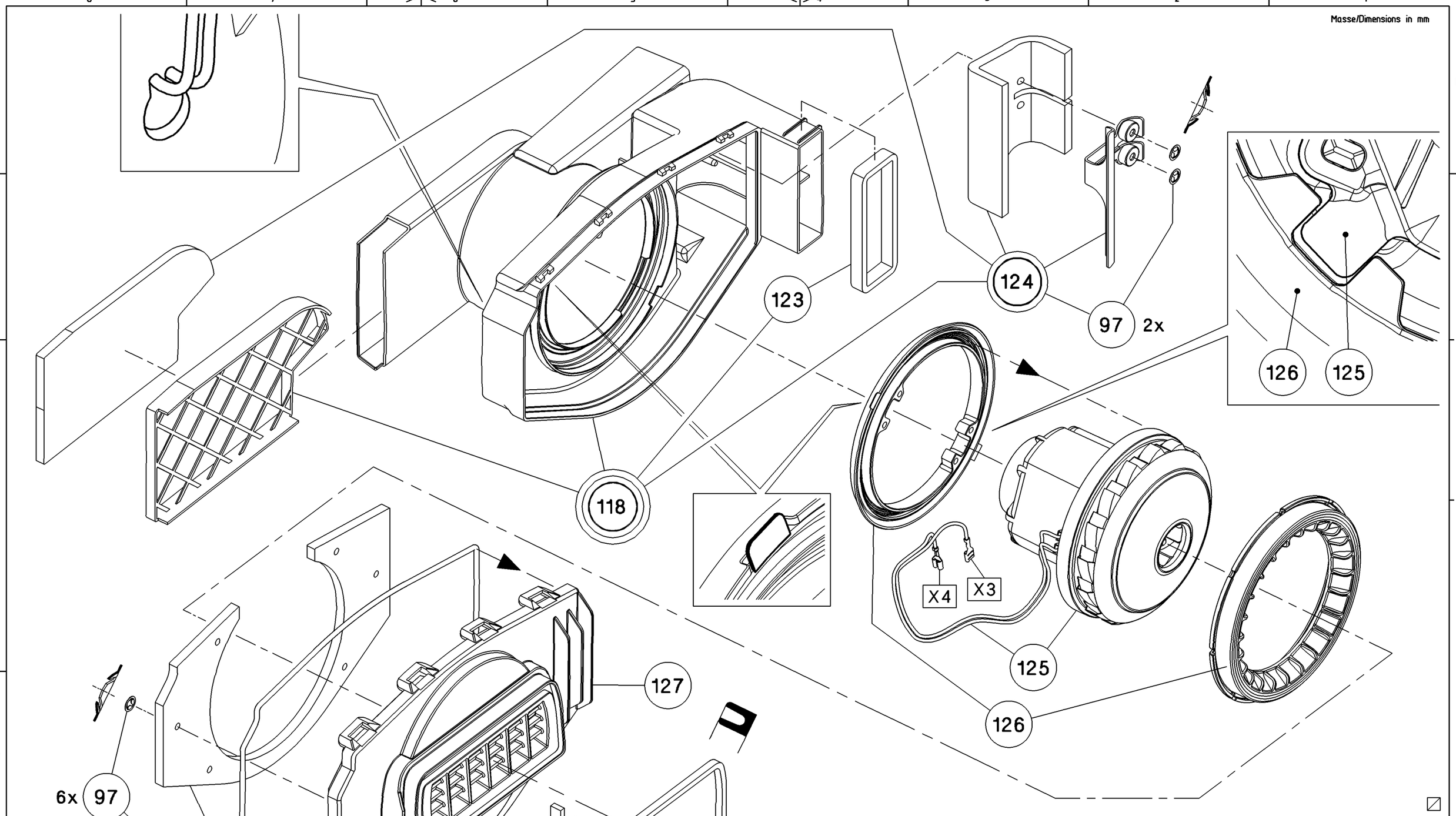

only valid in relation with current engineering BOM

Scale	Format	ISO "E"	Approval requirement	Critical feature	Name	Sheet
-	A3		ABE	Major feature	SD VC 20-U-Y / VC 40-U-Y	13 of 15
					SZ VC 20-U-Y / VC 40-U-Y	

Status	09.06.2016	Released	
Drawn	08.06.2016	GERNRAP	
Modified	08.06.2016	GERNRAP	
Checked			

Document No. 5112992 / E / 609343

Material No. 2046727

Hilti = registered trademark of Hilti Corporation, Schaan, LI

Copyright reserved

Print Date: 10.06.2016 09:59:19 | Printed by: Raphael Gerner | Document-Nr: USD / 5112992 / 013 / 05 | ECM: 000000609343 | Comment:

Masse/Dimensions in mm

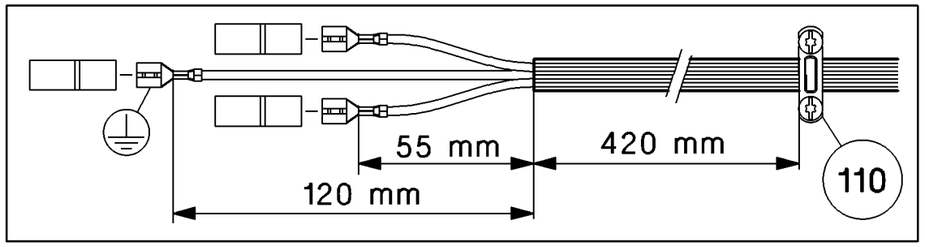

Cable	
Hose	suction
∅ 36 mm	> 180 mbar

Battery	
Hose	suction
∅ 36 mm	> 90 mbar

Electrical safety test according VDE 0701 / 0702

or

High voltage test according operation instruction SECUTEST

only valid in relation with current engineering BOM

Scale	Format	ISO "E"	Approval requirement	Critical feature
-	A3		ABE	Major feature

Status	09.06.2016	Released
Drawn	08.06.2016	GERNRAP
Modified	08.06.2016	GERNRAP
Checked		

Name
SD
VC 20-U-Y / VC 40-U-Y
SZ
VC 20-U-Y / VC 40-U-Y

Sheet 14 of 15

Document No. 5112992 / E / 609343

Material No. 2046727

Hilti = registered trademark of Hilti Corporation, Schaan, LI

Copyright reserved

Print Date: 10.06.2016 09:59:20 | Printed by: Raphael Gerner | Document-Nr: USD / 5112992 / 014 / 05 | ECM: 000000609343 | Comment:

Masse/Dimensions in mm

Haftungsausschluss

Reparaturen am Gerät dürfen nur von einer entsprechend sachkundigen Fachkraft unter Berücksichtigung der gesetzlichen Vorschriften durchgeführt werden. Andernfalls besteht Unfall- und Verletzungsgefahr. Die entsprechenden Instruktionen bezüglich Pflege, Unterhalt und Reparaturen in den jeweiligen Bedienungsanleitungen sind strikte einzuhalten.

Disclaimer

Tool repair must be performed only by qualified repair personnel knowledgeable about the specific tool and the legal requirements. Service, maintenance or repair preformed byunqualified personnel could result in a risk of accidents and injury. The instructions with regard to service, maintenance and repair in the respective operating instructions must be strictly adhered to.

免責條款

合格的機具維修人員必須具備特殊機具的知識，並符合法規的要求。由不合格的人員進行服務、保養或維修，可能會造成危險事故及傷害。必須嚴格遵守各項說明書中之服務、保養及維修的說明。

Изключване на отговорността

Уредът може да се ремонтира само от компетентен специалист при съблюдаване на нормативните разпоредби . В противен случай може да възникне опасност от нараняване или злополука. Трябва да се спазват стриктно съответните инструкции по отношение на техническо обслужване, поддръжка и ремонт, които са приведени в съответните ръководства за експлоатация.

Vyloučení záruky

Opravy nářadí smějí, s ohledem na zákonné předpisy, provádět náležitým způsobem jen odborně kvalifikovaní pracovníci. Jinak vzniká riziko úrazu a poškození. Pokyny ohledně ošetřování, údržby a oprav, uvedené v příslušných návodech k použití, musí být přesně dodrženy.

Ansvarsfraskrivelse

Reparationer på apparatet skal altid udføres af en fagmand i overensstemmelse med de gældende regler og bestemmelser. I modsat fald er der risiko for ulykker og personskader. Anvisningerne på pleje, vedligeholdelse og reparationer, der er beskrevet i instruktionsbogen, skal altid overholdes.

Αποποίηση ευθυνών

Επισκευές στη συσκευή επιτρέπεται να διενεργούνται μόνο από αντίστοιχα εκπαιδευμένα πρόσωπα λαμβάνοντας υπόψη τις νομικές διατάξεις. Διαφορετικά υπάρχει κίνδυνος για ατυχήματα και τραυματισμούς. Πρέπει να τηρούνται αυστηρά οι ισχύουσες οδηγίες που αναφέρονται στα εκάστοτε εγχειρίδια χρήσης όσον αφορά τη φροντίδα, τη συντήρηση και τις επισκευές.

Exención de responsabilidad

Las reparaciones que se realicen en la herramienta sólo pueden ser efectuadas por expertos especializados conforme a las disposiciones legales. En caso contrario, existe el peligro de accidente o el riesgo de lesiones. Las indicaciones referentes al cuidado, al mantenimiento y a las reparaciones incluidas en los correspondientes manuales de instrucciones deben cumplirse estrictamente.

Vastutuse välistamine

Seadet tohivad parandada üksnes asjaomase ettevalmistusega spetsialistid, kes peavad kinni seadusandlikest eeskirjadest. Nimetatud nõude eiramise tagajärjeks on vigastuste ja õnnetuste oht. Rangelt tuleb järgida iga seadme kasutusjuhendis toodud asjaomaseid hooldus-, korrashoiu- ja parandusjuhiseid.

Vastuulauseke

Laitteiden ja koneiden korjaustöitä saa tehdä vain ammattitaitoinen, näihin töihin koulutettu henkilö, ja töissä on noudatettava lakisääteisiä määräyksiä. Muutoin onnettomuus- ja loukkaantumisvaara on olemassa. Käyttöohjeissa annettuja hoitoa, ylläpitoa ja korjauksia koskevia ohjeita on ehdottomasti noudatettava tarkasti.

Limitation de responsabilité

Les réparations sur l'appareil doivent exclusivement être effectuées par une main-d'œuvre qualifiée et compétente, conformément aux prescriptions légales. À défaut de quoi, il y a risque d'accidents et de blessures corporelles. Les instructions correspondantes relatives au nettoyage, à l'entretien et aux réparations spécifiées dans les modes d'emploi respectifs doivent être rigoureusement respectées.

Isključenje odgovornosti

Popravke na uredaju smiju izvoditi samo odgovarajući stručnjaci uzimajući u obzir zakonske propise. U suprotnom slučaju postoji opasnost od nezgoda i tjelesnih ozljeda. Strogo se valja pridržavati odgovarajućih uputa glede njege, održavanja i popravaka u pojedinim uputama za uporabu.

A felelősség kizárása

A szerszám javítását csak kifejezetten hozzáértő szakember végezheti a vonatkozó törvényes előírások betartásával. Ennek figyelmen kívül hagyása baleset- és sérülésveszélyt idéz elő. A mindenkori kezelési utasítás szervizre, karbantartásra és javításra vonatkozó rendelkezéseit szigorúan be kell tartani.

Esclusione di responsabilità

Le riparazioni dell'attrezzo devono essere eseguite esclusivamente da personale specializzato addestrato, osservando i relativi requisiti di legge. In caso contrario sussiste il pericolo di incidenti e di lesioni. Attenersi con precisione alle istruzioni relative alla cura, la manutenzione e la riparazione riportate nelle rispettive istruzioni d'uso.

免責条項

本体の修理は、訓練を受けた修理スペシャリストのみが、適用されている法規に従って行うことができます。その他の方が修理しますと、怪我や事故の危険がともないます。取扱説明書に記述されている手入れ、保守および修理に関する指示を必ず遵守してください。

보증제외

기기의 수리는 법규를 고려하여 전문 기술자만이 실시할 수 있습니다. 그렇게 하지 않으면 사고 및 부상의 위험이 있습니다. 해당 사용 설명서에 기재되어 있는 서비스, 유지보수 및 수리와 관련된 지침을 엄격하게 준수해야 합니다.

Atsakomybės apribojimas

Prietaisas gali būti taisomas tik atitinkamą kvalifikaciją turinčių specialistų atsižvelgiant į teisinius potvarkius. Priešingu atveju yra pavojus patirti nelaimingą atsitikimą arba susižeisti. Privalu tiksliai laikytis atitinkamų priežiūros, apternavimo ir remonto instrukcijų, nurodytų atitinkamo prietaiso naudojimo instrukcijoje.

Atbildības atsaukšana

Instrumenta remontu drikst veikt tikai atbilstoši kvalificēts personāls, ievērojot spēkā esošās tiesību normas. Citādā gadījumā pastāv negadījumu risks un risks gūt traumas. Stingri jāievēro atbilstošie attiecīgo lietošanas instrukciju norādījumi, kuri attiecas uz instrumentu kopšanu, uzturēšanu kārtībā un remontu.

Disclaimer

Reparaties aan het apparaat mogen alleen worden uitgevoerd door gekwalificeerd en deskundig personeel, met inachtneming van de wettelijke voorschriften. Wordt hier niet aan voldaan, dan kan dit leiden tot ongevallen of letsel. Men dient zich strikt te houden aan de instructies inzake verzorging, onderhoud en reparaties in de betreffende gebruiksaanwijzingen.

Ansvarsfraskrivelse

Reparasjon av maskinen skal kun foretas av sakkyndig fagperson . Lovfestede krav må følges under dette arbeidet. I motsatt fall oppstår fare for ulykker og personskade. De tilhørende instruksjonene vedrørende pleie, vedlikehold og reparasjon i de tilhørende bruksanvisningene må følges nøye.

Wyłączenie odpowiedzialności cywilnej

Naprawy urządzenia mogą być przeprowadzane wyłącznie przez autoryzowanego serwisanta z uwzględnieniem obowiązujących przepisów prawnych. W przeciwnym razie istnieje zagrożenie spowodowania wypadku i obrażeń. Należy dokładnie przestrzegać zaleceń z poszczególnych instrukcji obsługi dotyczących pielęgnacji, utrzymywania w stanie sprawności oraz napraw.

Exclusão de responsabilidade

As reparações no aparelho devem ser efectuadas apenas por pessoal técnico especializado, sob consideração das prescrições legais. Caso contrário, existe perigo de acidente e ferimentos. As respectivas instruções relativas à conservação, manutenção e reparações que constam no respectivo manual de instruções devem ser rigorosamente respeitadas.

Исключение ответственности

Ремонт аппарата должен выполняться только квалифицированным специалистом при условии соблюдения предписаний, установленных законом.
В противном случае возможна угроза несчастного случая или травмирования.
Следует неукоснительно выполнять инструкции по уходу, содержанию и ремонту аппарата, приведенные в соответствующих руководствах по эксплуатации.

Vylúčenie záruky

Opravy náradia smú, s ohľadom na zákonné predpisy, vykonávať náležitým spôsobom len odborne kvalifikovaní pracovníci. Inak vzniká riziko úrazu a poškodenia. Pokyny týkajúce sa ošetrovania, údržby a opráv, uvedené v príslušných návodoch na používanie, musia byť presne dodržané.

Izključitev odgovornosti

Popravila lahko izvajajo le ustrezno usposobljeni strokovnjaki ob upoštevanju zakonskih predpisov. V nasprotnem primeru obstaja nevarnost nesreč in poškodb. Strogo je treba upoštevati ustrezna navodila glede nege, vzdrževanja in popravila iz posameznih navodil za uporabo.

Friskrivning från ansvar

Reparationer på detta verktyg får endast utföras av fackman, och gällande lagar och regler måste följas. I annat fall finns risk för olyckor och skador. Instruktionerna om skötsel, underhåll och reparationer i respektive bruksanvisning måste följas strikt.

Clauze de exonerare

Repararea mașinii (sculei) trebuie efectuată doar de către personal calificat pentru reparații, care posedă cunoștințe despre mașina respectivă și cerințele legale. Activitățile de depanare, întreținere și reparare efectuate de personal necalificat pot duce la risc de accidentări și vătămări.Trebuiesc respectate cu strictețe toate instrucțiunile de depanare, întreținere și reparare din manualele de utilizare respective.

only valid in relation with current engineering BOM

Scale	Format	ISO "E"	Approval requirement	Critical feature	Name	Sheet
-	A3		ABE	Major feature	SD VC 20-U-Y / VC 40-U-Y SZ VC 20-U-Y / VC 40-U-Y	15 of 15

Status	09.06.2016	Released	
Drawn	08.06.2016	GERNRAP	
Modified	08.06.2016	GERNRAP	
Checked			

Document No. 5112992 / E / 609343

Material No. 2046727

Hilti = registered trademark of Hilti Corporation, Schaan, LI

Copyright reserved

Print Date: 10.06.2016 09:59:21 | Printed by: Raphael Gerner | Document-Nr: USD / 5112992 / 015 / 05 | ECM: 000000609343 | Comment: